Course Code 005636 (Fall 2017)

Multimedia

Image Standard: The JPEG Standard

Prof. S. M. Riazul Islam, Dept. of Computer Engineering, Sejong University, Korea

E-mail: riaz@sejong.ac.kr

The JPEG Standard

- JPEG is an image compression standard which was accepted as an international standard in 1992.
  - Developed by the Joint Photographic Expert Group of the ISO/IEC
  - For coding and compression of color/gray scale images
  - Yields acceptable compression in the 10:1 range

The JPEG Standard

- JPEG is a lossy compression technique
  - Based on the DCT
  - JPEG is a general image compression technique independent of
    - Image resolution
    - Image and pixel aspect ratio
    - Color system
    - Image complexity
  - A scheme for video compression based on JPEG called Motion JPEG (MJPEG) exists

JPEG Encoding Overview

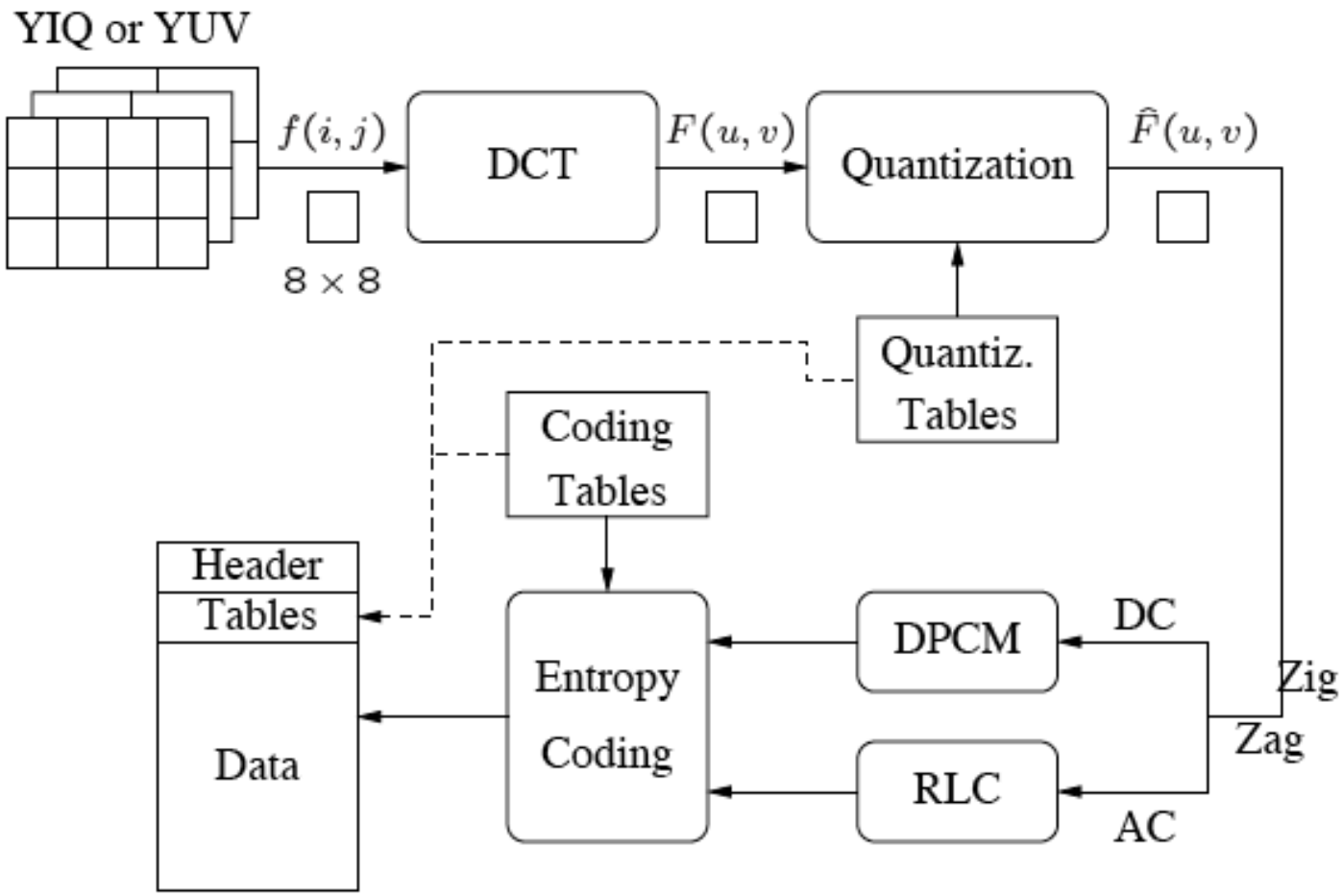

JPEG Encoding Overview

- The main steps in JPEG encoding are the following
  - Transform RGB to YUV or YIQ
  - DCT on 8x8 image blocks
  - Quantization
  - Zig-zag ordering and run-length encoding
  - Entropy coding

DCT on Image Blocks

- The image is divided up into 8x8 blocks
  - 2D DCT is performed on each block
  - The DCT is performed independently for each block
  - This is why, when a high degree of compression is requested, JPEG gives a “blocky” image result

Quantization

- Quantization in JPEG aims at reducing the total number of bits in the compressed image
  - Divide each entry in the frequency space block by an integer, then round
  - Use a quantization matrix $Q(u, v)$

$$\hat{F}(u,v) = round\left(\frac{F(u,v)}{Q(u,v)}\right)$$

Quantization Example

8x8

200	202	189	188	189	175	175	175
200	203	198	188	189	182	178	175
203	200	200	195	200	187	185	175
200	200	200	200	197	187	187	187
200	205	200	200	195	188	187	175
200	200	200	200	200	190	187	175
205	200	199	200	191	187	187	175
210	200	200	200	188	185	187	186

$f(i,j)$

2D DCT

515	65	-12	4	1	2	-8	5
-16	3	2	0	0	-11	-2	3
-12	6	11	-1	3	0	1	-2
-8	3	-4	2	-2	-3	-5	-2
0	-2	7	-5	4	0	-1	-4
0	-3	-1	0	4	1	-1	0
3	-2	-3	3	3	-1	-1	3
-2	5	-2	4	-2	2	-3	0

$F(u,v)$

$\div$

Quantization Table/Matrix

16	11	10	16	24	40	51	61
12	12	14	19	26	58	60	55
14	13	16	24	40	57	69	56
14	17	22	29	51	87	80	62
18	22	37	56	68	109	103	77
24	35	55	64	81	104	113	92
49	64	78	87	103	121	120	101
72	92	95	98	112	100	103	99

$Q(u,v)$

32	6	-1	0	0	0	0	0
-1	0	0	0	0	0	0	0
-1	0	1	0	0	0	0	0
-1	0	0	0	0	0	0	0
0	0	0	0	0	0	0	0
0	0	0	0	0	0	0	0
0	0	0	0	0	0	0	0
0	0	0	0	0	0	0	0

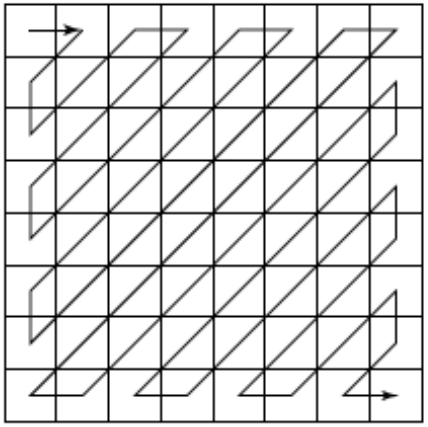

Preparation for Entropy Coding

- We have seen two main steps in JPEG coding: DCT and quantization
- The remaining steps all lead up to entropy coding of the quantized DCT coefficients
  - These additional data compression steps are lossless
  - Most of the lossiness is in the quantization step

Run-Length Coding

- We now do run-length coding
  - The AC and DC components are treated differently
  - Since after quantization we have many 0 AC components, RLC is a good idea
  - Note that most of the zero components are towards the lower right corner (high spatial frequencies)
  - To take advantage of this, use zigzag scanning to create a 64-vector

Zigzag Scan in JPEG

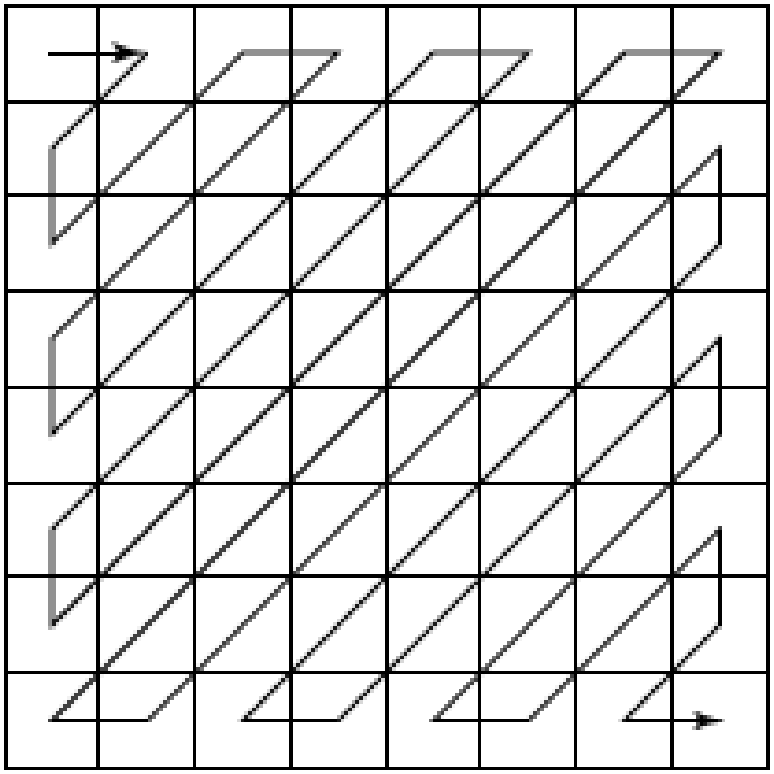

Run-Length Coding

- Now the RLC step replaces values in a 64-vector (previously an 8x8 block) by a pair (RUNLENGTH, VALUE), where RUNLENGTH is the number of zeroes in the run and VALUE is the next non-zero value
  - From the first example we have (32, 6, -1, -1, 0, -1, 0, 0, 0, -1, 0, 0, 1, 0, 0, ..., 0)
  - This becomes (0,6) (0,-1)(1,-1)(3,-1)(2,1)(0,0) - Note that DC coefficient is ignored

Entropy Coding

- Now we apply entropy coding to the RLC coded AC coefficients and the DPCM coded DC coefficients
  - The baseline entropy coding method uses Huffman coding on images with 8-bit components
  - DPCM-coded DC coefficients are represented by a pair of symbols (SIZE, AMPLITUDE)
    - SIZE = number of bits to represent coefficient
    - AMPLITUDE = the actual bits

JPEG2000

- JPEG2000 (extension jp2) is the latest series of standards from the JPEG committee
  - Uses wavelet technology
  - Better compression than JPG
  - Superior lossless compression
  - Supports large images and images with many components
  - Region-of-interest coding
  - Compound documents
  - Computer-generated imagery
  - Other improvements over JPG

Q&A